redroseforest

assembling and positioning your bird box

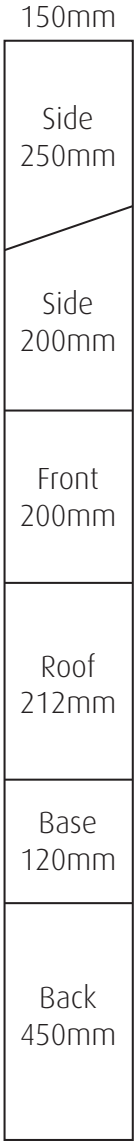

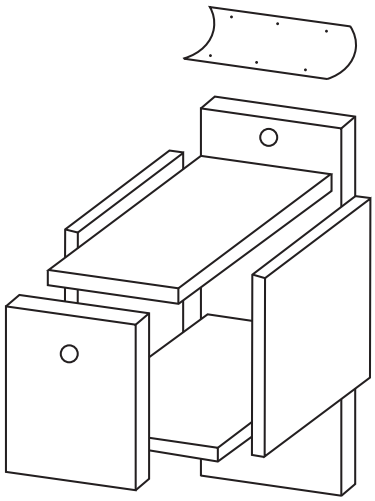

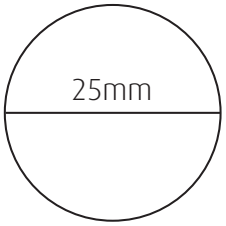

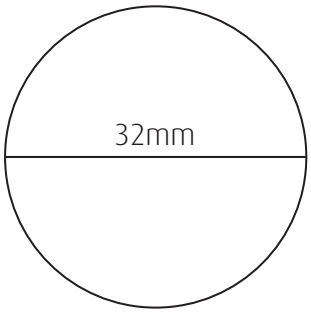

this kit contains:

- 6 pieces of wood.
  - The front with the hole.
  - The largest bit is the back.
  - The two pieces with an angled edge are the sides.
  - The smallest piece is the base.
  - The remaining piece is the roof.
- A piece of rubberised hinge material.
- Screws for assembly.

you need:

- A screwdriver.
- A drill (optional).

how to assemble the bird box?

1 Screw the longest edges of the base onto shortest square edges of the sides. The screws should fix through the sides into the base so the base is within the sides and not underneath.
2 Screw the front onto the sides/base.
3 Screw the front/sides/base onto the back.
4 Fix the roof onto the rest of the bird box using the rubber hinge. The hinge should be on the outside and attached onto the back and roof.
5 Place the bird box in a suitable location.

tip Pre drilling the screw holes makes the process easier.

where should the box be placed?
Avoid placing it so that it faces into strong sun or the wettest weather. Thus, it is best facing north, east or south-east, unless there are trees and buildings which give it shelter.

Don't put a box too close to a bird table. If you have to, because your garden is small, then stop putting out food once birds show interest in the box. Otherwise they will spend all their time chasing other birds attracted to the food, and may eventually give up trying to nest altogether.

Two boxes of the same kind should not be too close together. You may however, manage to get tits in one and robins or wrens in another sort a few metres away.

Put the box 3-5 metres high, as safe as possible from cats and interference.

It is best to hang it angled forward slightly and kept away from the wall or tree by a strip of wood. You can discourage predators by hanging it from wires - use four so that it does not spin, but a little swaying does not matter so much.

Do not attach the bird box to a tree by screwing the back directly to a living tree. Use plastic strapping which goes around the tree and the back of the bird box but is then tighten and fastened to the bird box back only. Flexible tree strapping can be obtained from most garden centres.

should the box be cleaned out each year?
Nesting material will build up inside and eventually make it unusable. Parasites lay eggs in nests which infect new arrivals next spring. So it is best to clean out the box each autumn. Young birds return to roost for a while after they have left the nest, so leave it for a few weeks before cleaning it out.

Too much disturbance to nest-boxes should be avoided. Simply watching them from a window gives plenty of entertainment.

redroseforest
Dock Office Trafford Road Salford Quays Salford M50 3XB
tel 0161 872 1660 fax 0161 872 1680
team@redroseforest.co.uk www.redroseforest.co.uk